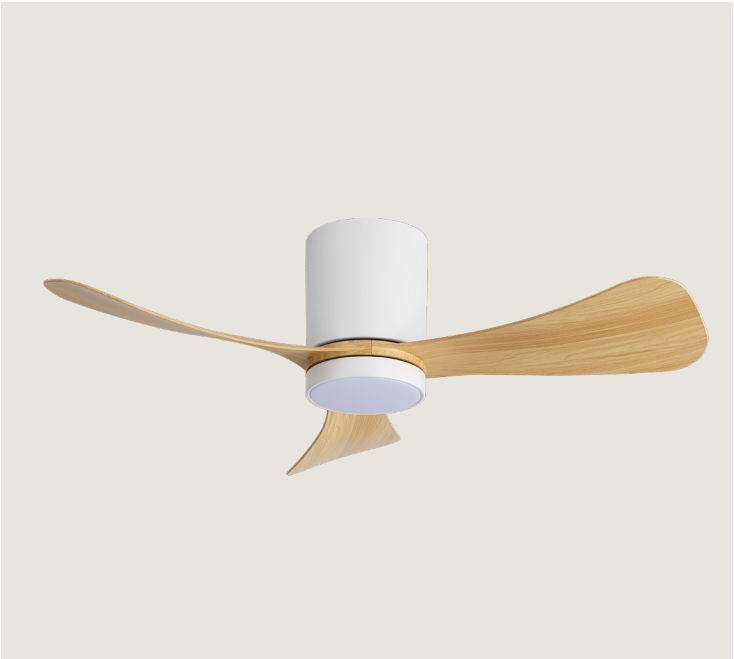

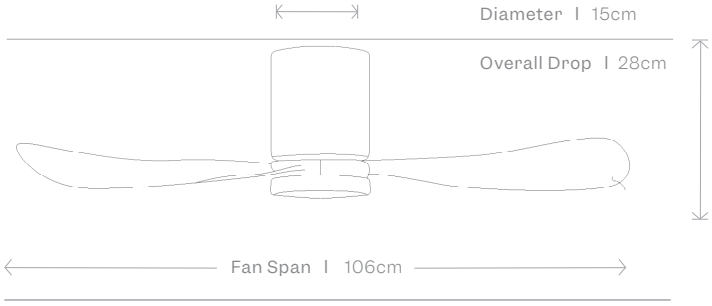


White with
Natural ABS Blades

# The Cove Hugger Indoor Fan

90027719

Compact and considered, the Cove pairs a crisp white finish with natural-look blades for a relaxed, contemporary feel. It's quiet DC motor delivers efficient airflow, making it an easy addition to everyday living spaces.

6 Speed Remote Included

## Reversible *Blades*

**Summer & Winter Comfort**

Reverse airflow to keep rooms cooler in summer, and circulate warm air efficiently during winter.

## DC *Motor*

**Quiet, Efficient Performance**

Uses less energy while delivering powerful airflow

## 6 Speeds *Airflow*

**Effortless, Tailored Control**

Enjoy versitile operation with six speed settings to suit every moment.

| | | | | | |
|---|---|---|---|---|---|
| **Fan Span** | 106cm | **Blade Material** | ABS | **Ceiling Pitch** | 0° |
| **Overall Drop** | 28cm | **Blade Colour** | Natural | **Voltage & Frequency** | 230V / 50Hz |
| **Weight** | 4.4kg | **No. of Blades** | 3 | **IP Rating** | IP20 |
| **Motor** | DC (Direct Current) | **Speeds** | 6 Speed (Remote Control) | **Remote Control** | Included |
| **Power** | 32W | **Body Material** | Steel | **Suitable Location** | Indoor only |
| **Maximum Airflow** | 155 m3 / Min | **Body Finish** | White | **Suitable Room Size** | Small to Medium |

**Light Kit Specifications**

| | Wattage | Light settings | Kelvins | Lumens | Dimmable |
|---|---|---|---|---|---|
| Fixed Light | 18W | 3 | 3000K-4000K-6000K | 1017lm | NO |

There's so much more than what's in store

Fans
COLLECTION

early settler