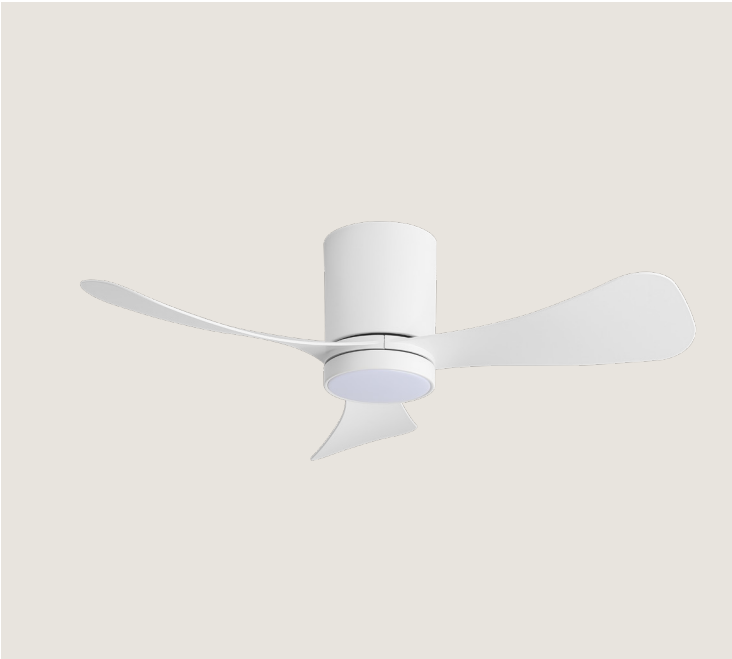

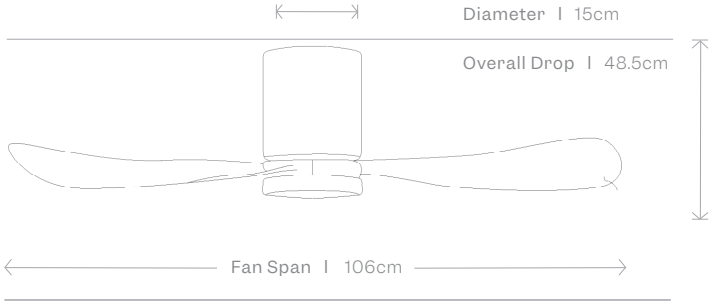

White with
White ABS Blades

The Cove Hugger Indoor Fan

90027720

Designed for lower ceilings, the Cove Hugger pairs a clean, low-profile silhouette with an all-white finish. It's quiet, energy-efficient DC motor delivers comfortable airflow while blending seamlessly into modern spaces.

6 Speed Remote Included

Reversible *Blades*

Summer & Winter Comfort

Reverse airflow to keep rooms cooler in summer, and circulate warm air efficiently during winter.

DC *Motor*

Quiet, Efficient Performance

Uses less energy while delivering powerful airflow

6 Speeds *Airflow*

Effortless, Tailored Control

Enjoy versitile operation with six speed settings to suit every moment.

Fan Span	106cm	**Blade Material**	ABS	**Ceiling Pitch**	0°
Overall Drop	28cm	**Blade Colour**	White	**Voltage & Frequency**	230V / 50Hz
Weight	4.4kg	**No. of Blades**	3	**IP Rating**	IP20
Motor	DC (Direct Current)	**Speeds**	6 Speed (Remote Control)	**Remote Control**	Included
Power	32W	**Body Material**	Steel	**Suitable Location**	Indoor only
Airflow Rate	155 m3 / Min	**Body Finish**	White	**Suitable Room Size**	Small to Medium

Light Kit Specifications

	Wattage	Light settings	Kelvins	Lumens	Dimmable
Fixed Light	18W	3	3000K-4000K-6000K	1017lm	NO

There's so much more than what's in store

Fans
COLLECTION

early settler