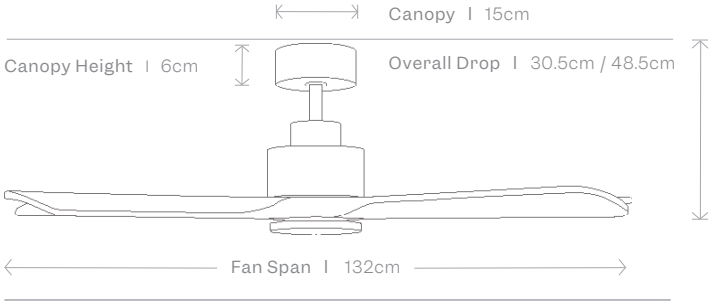

Supplied with 2 Extension Rods I 12cm + 30cm

Black with
Dark Walnut Timber Blades

The Breeze Indoor Fan

90027714

The Breeze 132cm DC ceiling fan combines natural beauty with powerful performance. Crafted with solid timber blades and a sleek matt black body, it delivers whisper-quiet, energy-efficient airflow all year round.

6 Speed Remote Included

Reversible *Blades*

Summer & Winter Comfort

Reverse airflow to keep rooms cooler in summer, and circulate warm air efficiently during winter.

DC *Motor*

Quiet, Efficient Performance

Uses less energy while delivering powerful airflow

Optional *LED Light Kit*

Optional Light

Add the optional LED light kit to illuminate your space.

Light kit (sold separately)
SKU I 90027715

Fan Span	132cm	**Blade Material**	Solid Wood	**Ceiling Pitch**	15° (max)
Overall Drop	30.5 | 48.5cm (with 12cm I 30cm rods)	**Blade Colour**	Walnut	**Voltage & Frequency**	230V / 50Hz
Weight	6.1kg	**No. of Blades**	5	**IP Rating**	IP20
Motor	DC (Direct Current)	**Speeds**	6 Speed (Remote Control)	**Remote Control**	Included
Power	34W	**Body Material**	Steel	**Suitable Location**	Indoor only
Maximum Airflow	220 m3 / Min	**Body Finish**	Black	**Suitable Room Size**	Medium to Large

Light Kit Specifications

	Wattage	Light settings	Kelvins	Lumens	Dimmable
Optional Light Kit	24W	3	3000K-4000K-6000K	1140lm	NO

There's so much more than what's in store

Fans
COLLECTION

early settler