Y521

Assembly Instruction
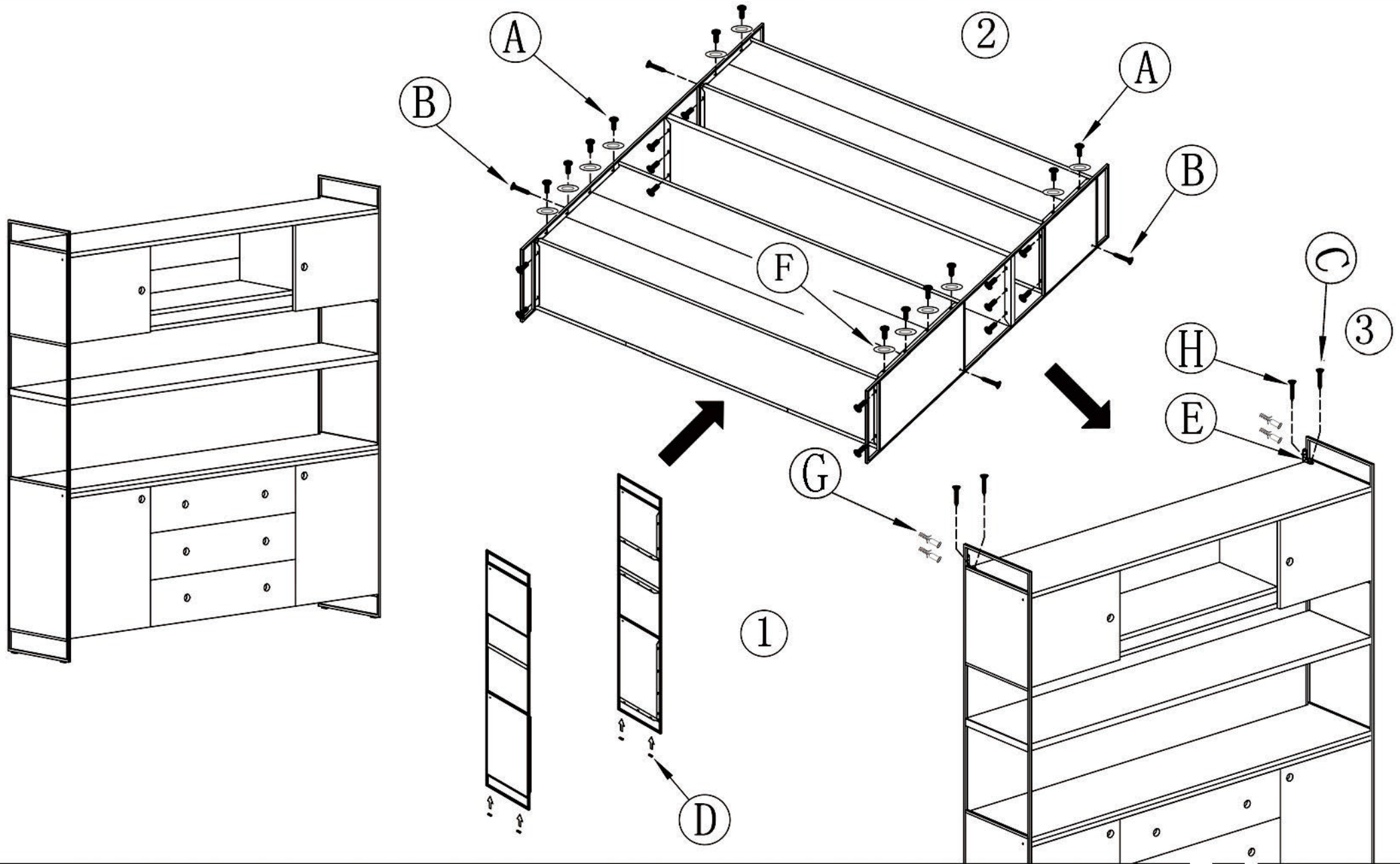
No.	A	B	C	D	E	F	G	H
Fittings								
Specification	ϕ6X18	ϕ4X25	ϕ4X20		58X58X18			
PC	26	4	4	4	2	26	4	4