ASSEMBLY INSTRUCTIONS

Avalon Queen/King Bed

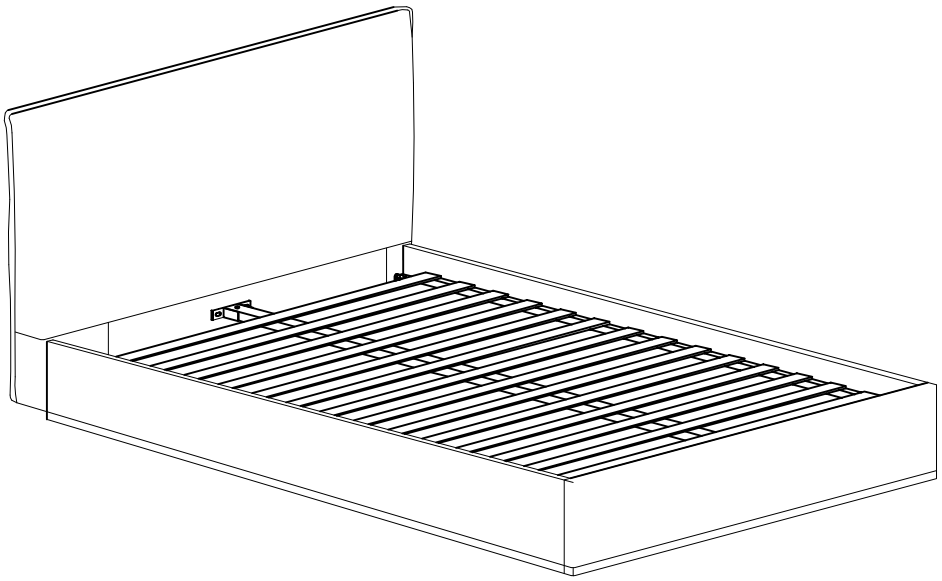

Tools Needed

2 person build

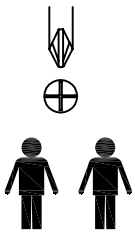

BED FITTINGS

		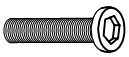		
Big Head Bolts (M8*18)	Small Bolts (M8*20)	Large Bolts (M8*40)	Screws (M8*32)	Allen Key (M5)
① X 12	② X 6	③ X 2	④ X 42	⑤ X 1
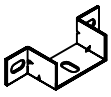				
Brackets	Plastic Support Legs	Washers (M8)		
⑥ X 2	⑦ X 2	⑧ X 8		

PART LIST

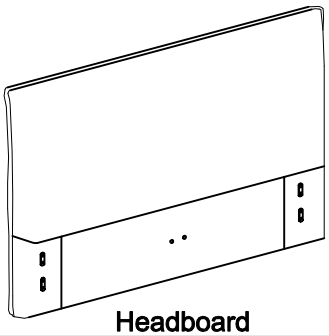	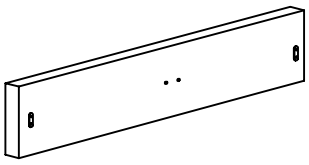	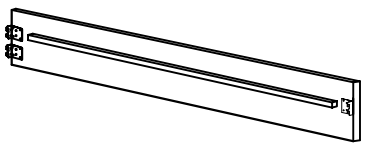
Headboard	Footboard	Right Side Rail
A X 1	B X 1	C X 1
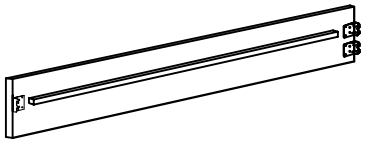		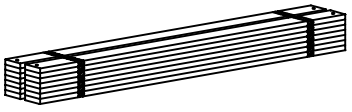
Left Side Rail	Center Rail	Slats
D X 1	E X 1	F X 1

Step 1

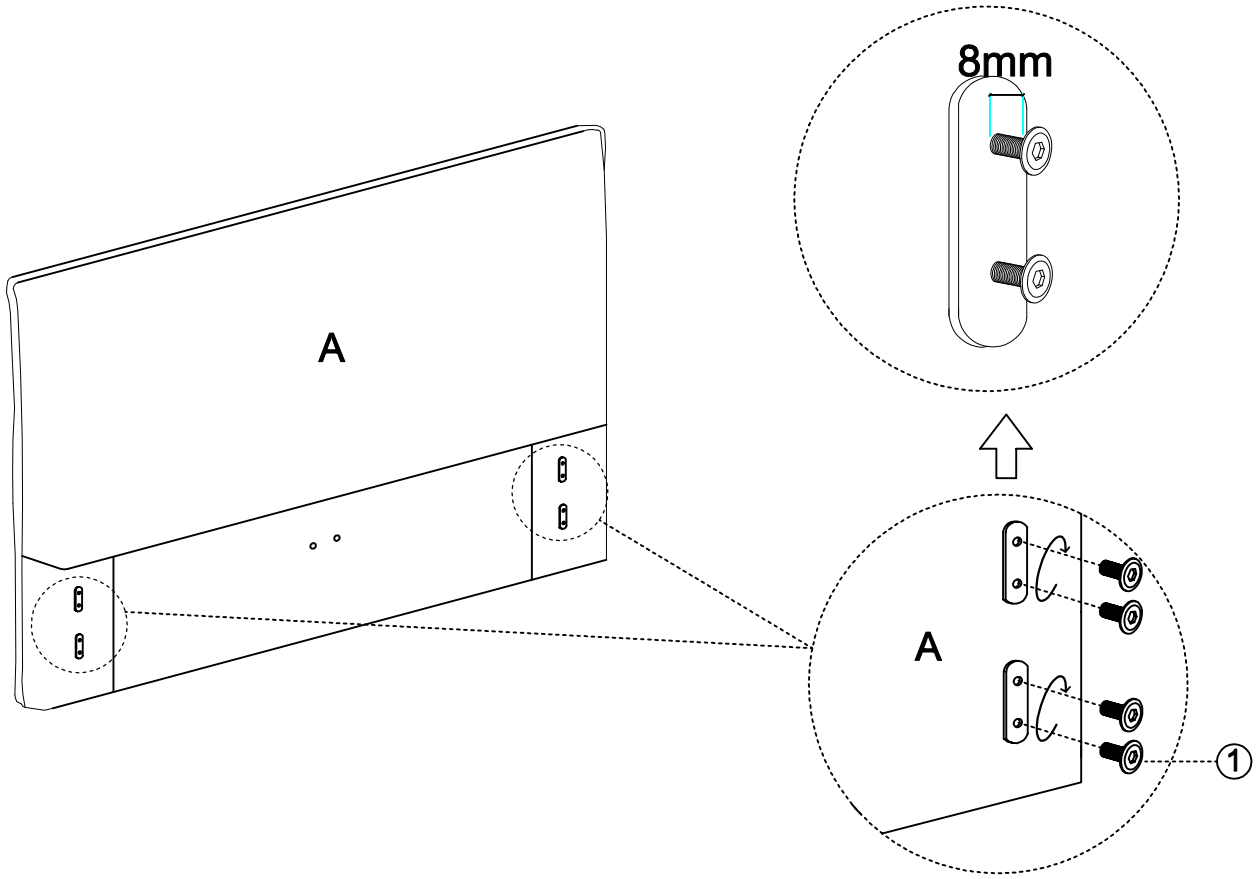

Step 2

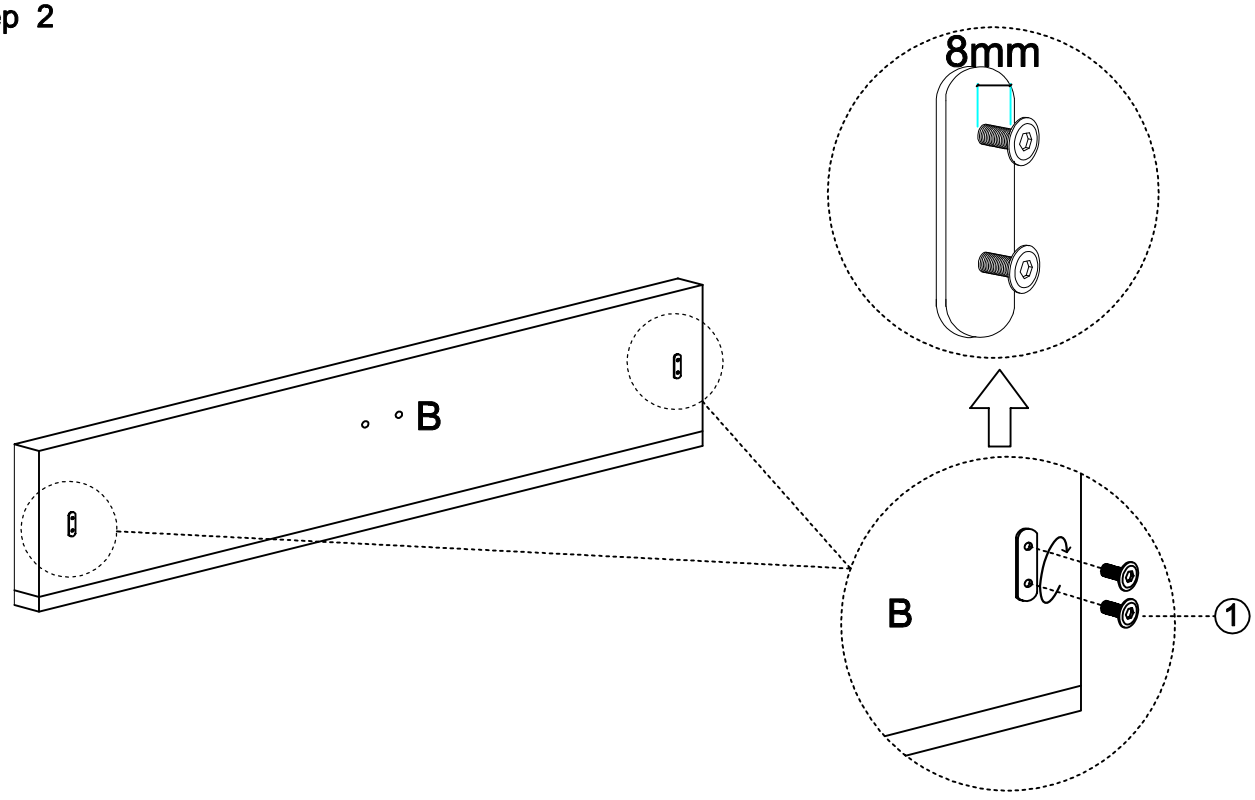

Step 3

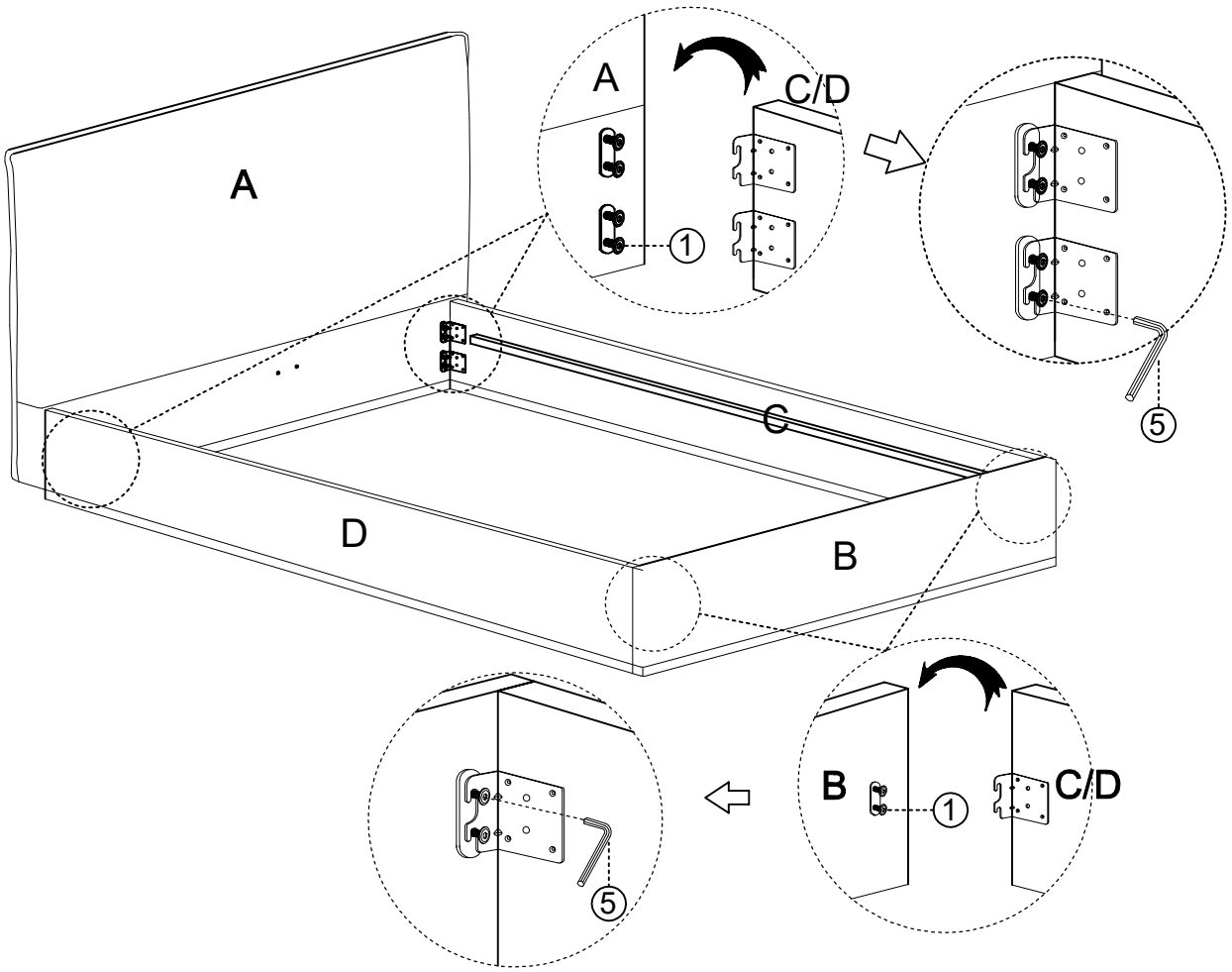

Do not fully tighten the Big Head Bolts ① until Step 6.

Step 4

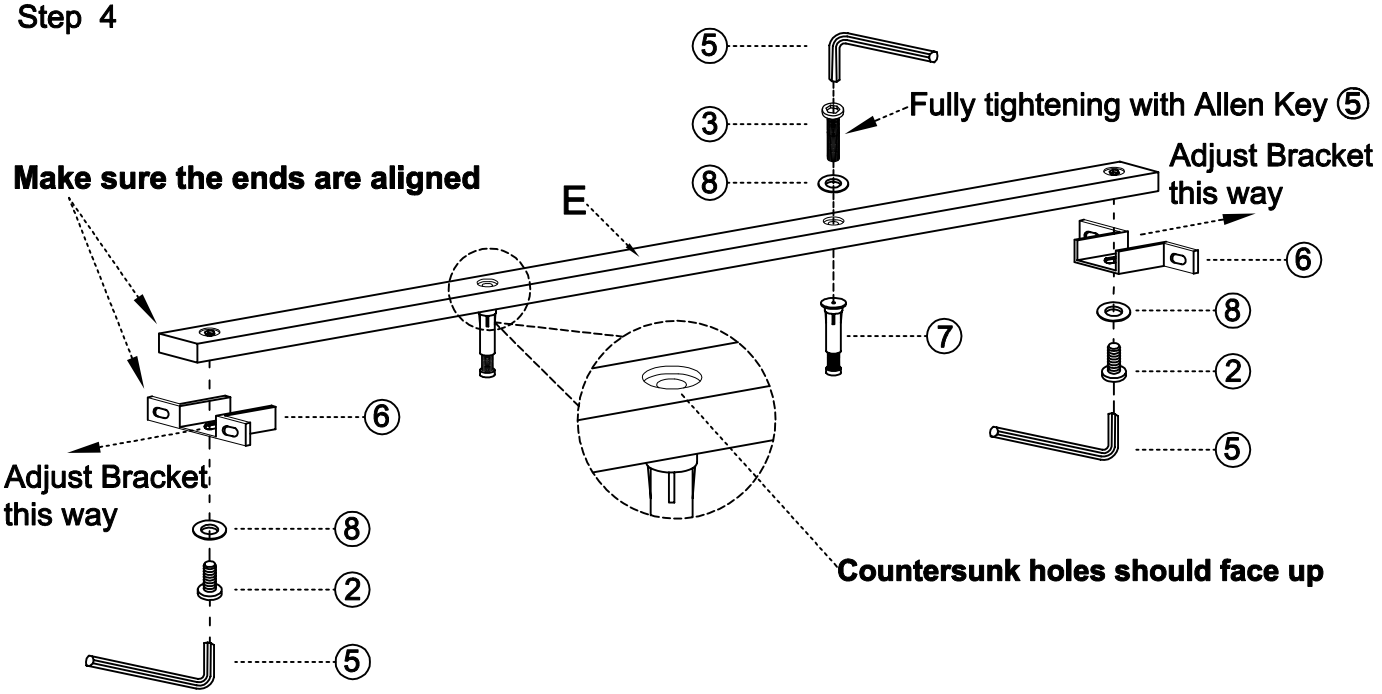

Step 5

You must use.

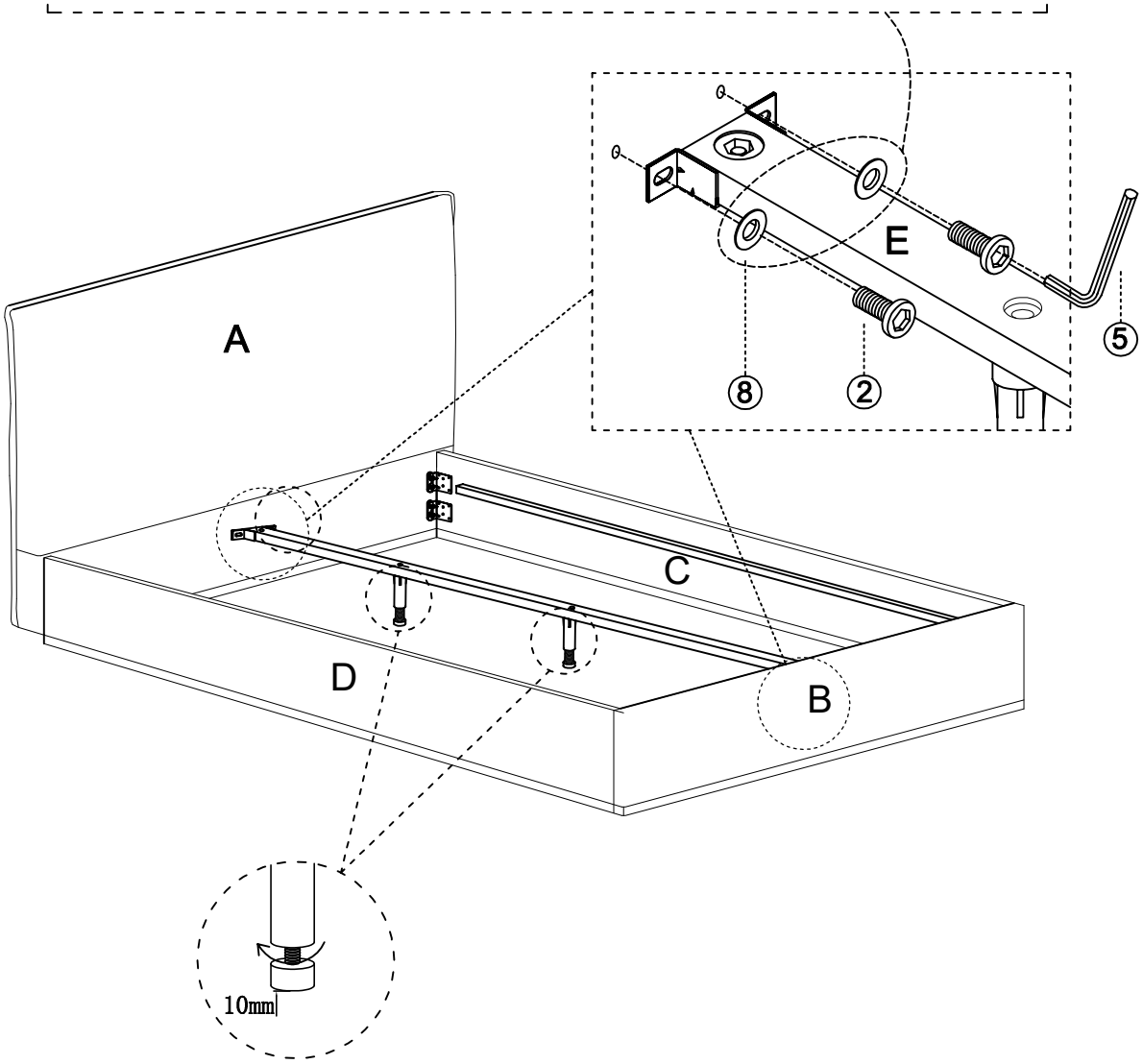

Insert the Center Rail (E) between the Headboard (A) and Footboard (B) as shown.
Secure using 4 x Small Bolts ② and 4 x Washers ⑧,
fully tightening with Allen Key ⑤ (You MUST use the Washers).

Step 6

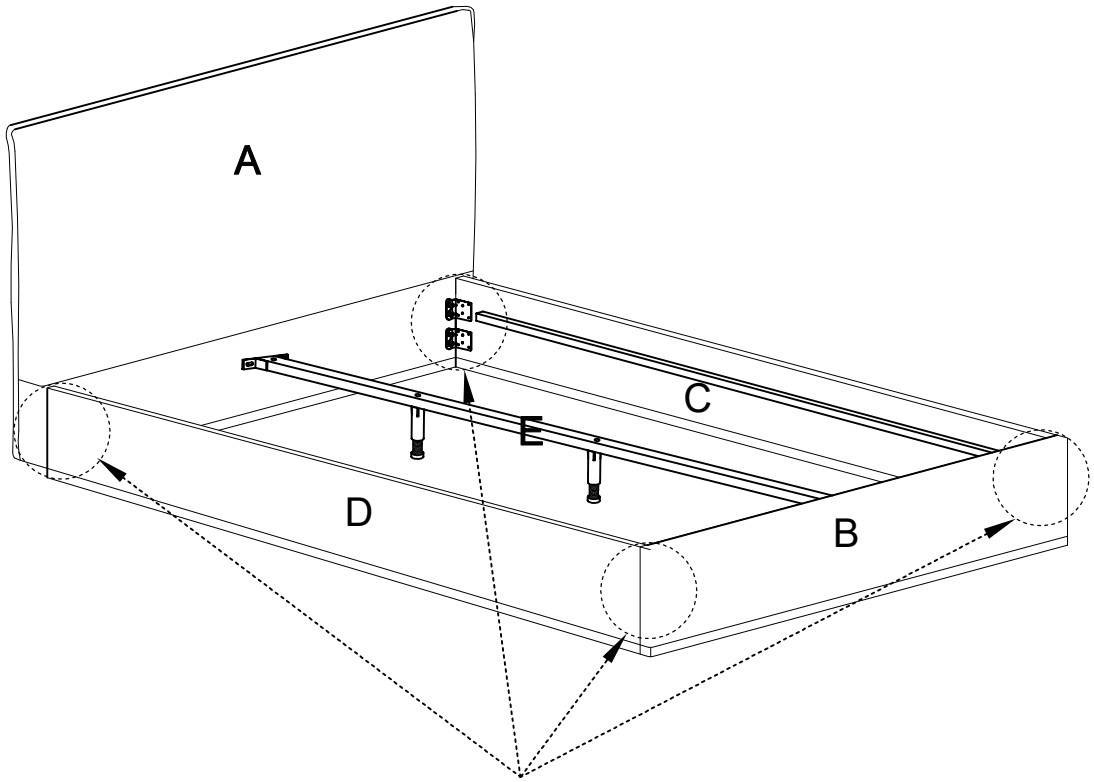

Fully tighten all the Big Head Bolts ① on the Headboard (A) and Footboard (B) .

Step 7

Please place the straight slats on the bed as shown.
Then tighten the screws on the four corners.

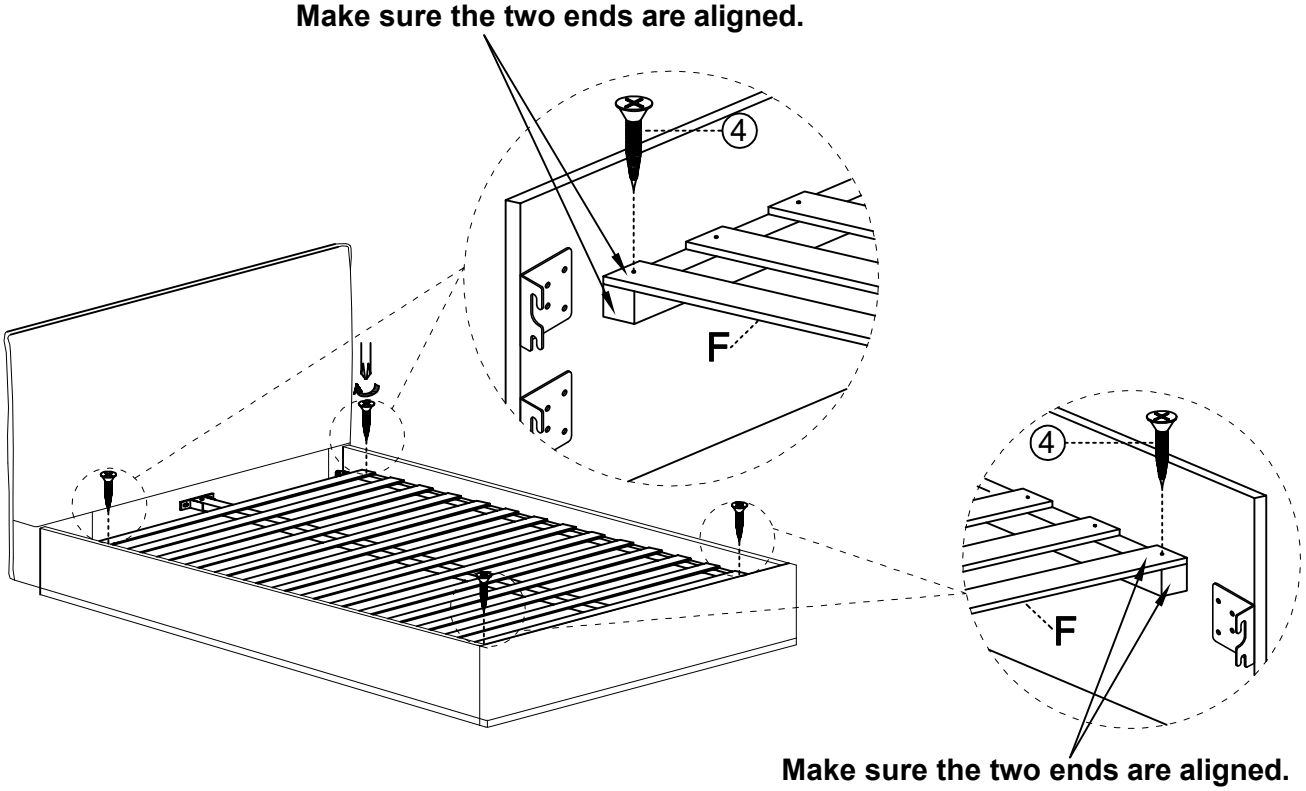

Step 8

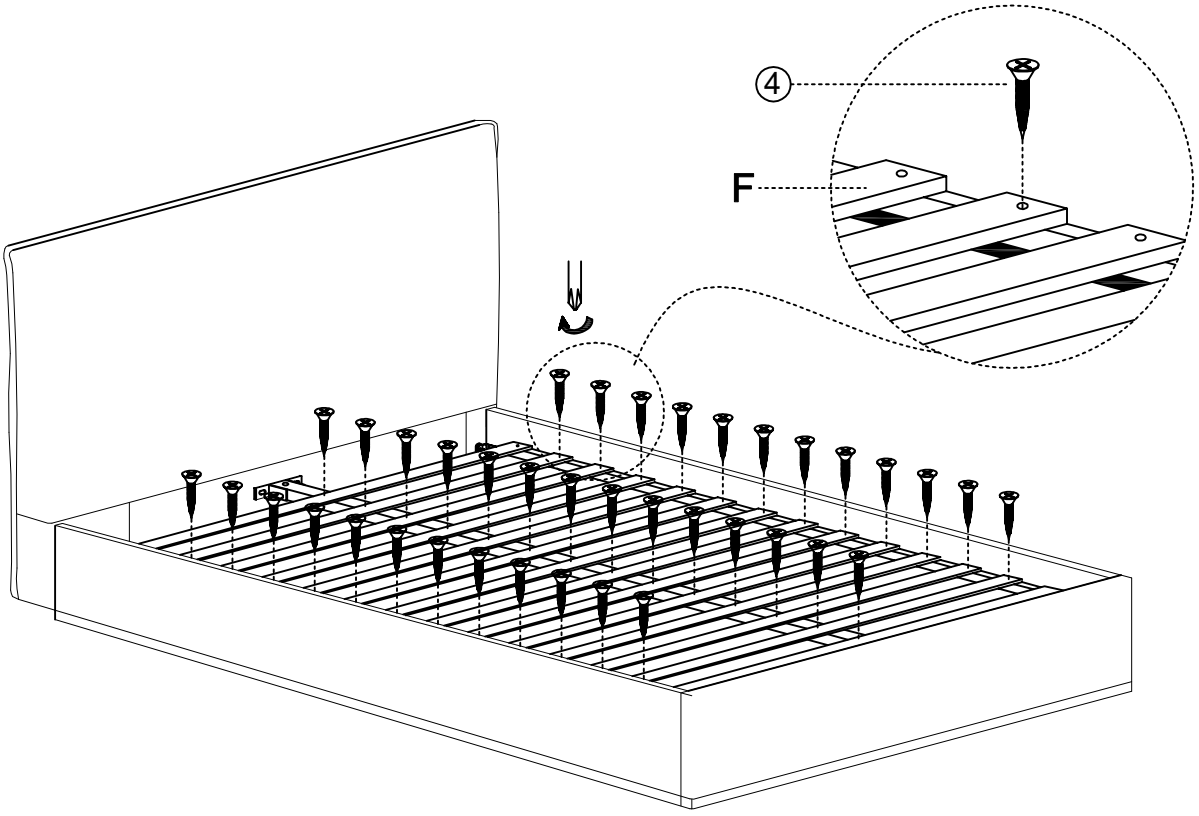

REMARK : ONCE BED IS ASSEMBLED, **DO NOT** SIT, STAND OR APPLY WEIGHT DIRECTLY TO SLATS UNLESS MATTRESS IS IN PLACE.