early settler

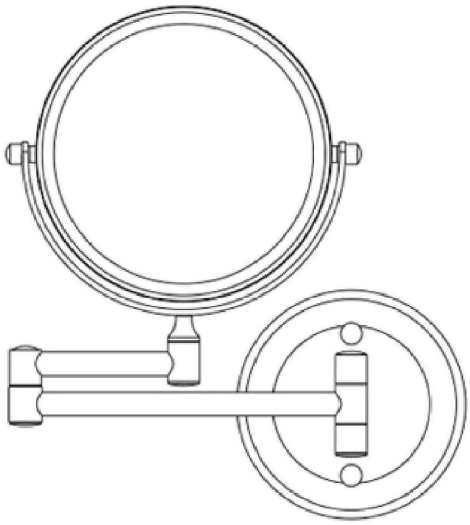

1

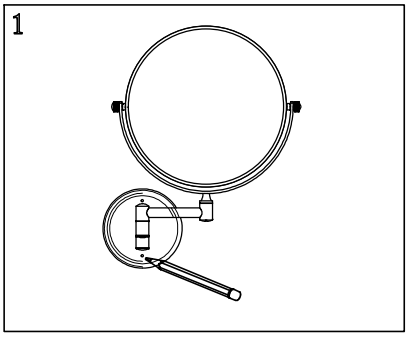

Place the mounting palate at the intended installation position and mark the positions of screw holes

2

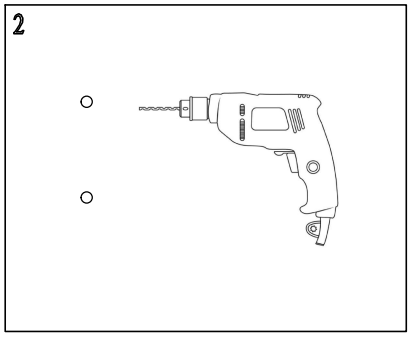

Drill suitable holes on the marked spots with an electric drill, then insert wall plugs

3

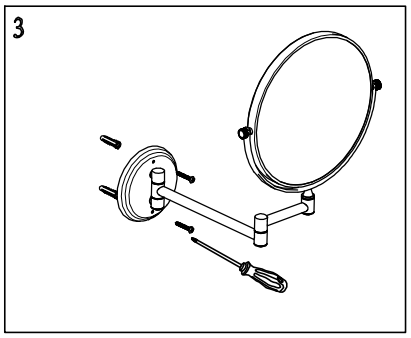

Tap the expansion screw in to the holes.
Align base plate holes with wall holes,tighten screws

4

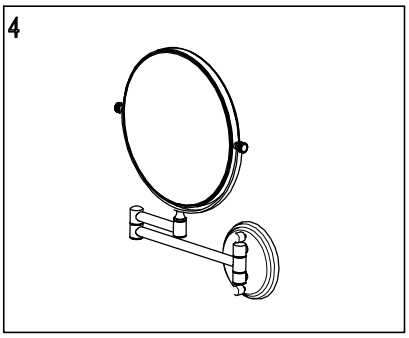

Align mirror holes with wall plate cover the nuts,finished